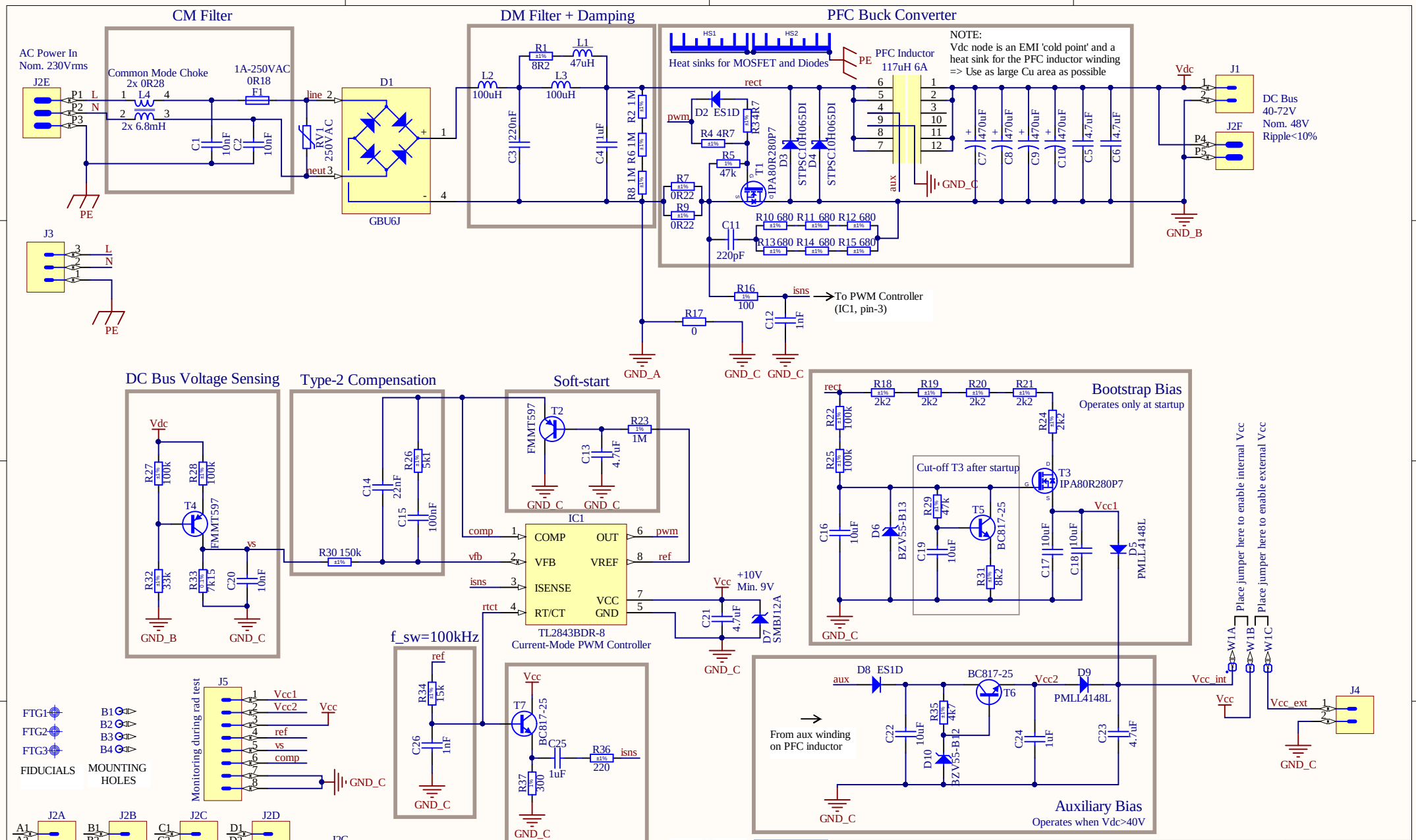
CM Filter
DM Filter + Damping
PFC Buck Converter
AC Power In
Nom. 230Vrms
J2E
Common Mode Choke
2x 0R28
L4
2x 6.8mH
1A-250VAC
0R18
F1
C1 10nF
C2 10nF
RV1
250VAC
D1
GBU6J
PE
J3
L1 47uH
R1 8R2
L2 100uH
L3 100uH
C3 220nF
C4 1uF
R2 1M
R6 1M
R8 1M
Heat sinks for MOSFET and Diodes
HS1
HS2
PE
PFC Inductor
117uH 6A
NOTE:
Vdc node is an EMI 'cold point' and a heat sink for the PFC inductor winding
=> Use as large Cu area as possible
D2 ES1D
R34 R7
R4 4R7
R5 47k
T1
IPA80R280P7
D3 STPSC10H065DI
D4 STPSC10H065DI
R7 0R22
R9 0R22
C11 220pF
R10 680 R11 680 R12 680
R13 680 R14 680 R15 680
C7 470uF
C8 470uF
C9 470uF
C10 470uF
C5 4.7uF
C6 4.7uF
GND_C
GND_B
Vdc
J1
J2F
DC Bus
40-72V
Nom. 48V
Ripple<10%
R16 100
isns
To PWM Controller
(IC1, pin-3)
R17 0
C12 1nF
GND_A
GND_C
DC Bus Voltage Sensing
R27 100k
R28 100k
T4 FMMT597
R32 33k
R33 7k15
C20 10nF
vs
GND_B
GND_C
Type-2 Compensation
R30 150k
C14 22nF
C15 100nF
R26 5k1
Soft-start
T2 FMMT597
R23 1M
C13 4.7uF
IC1
COMP
VFB
ISENSE
RT/CT
OUT
VREF
VCC
GND
comp
vfb
isns
rtct
pwm
ref
TL2843BDR-8
Current-Mode PWM Controller
Vcc
+10V
Min. 9V
C21 4.7uF
D7 SMBJ12A
f_sw=100kHz
R34 15k
C26 1nF
T7 BC817-25
C25 1uF
R36 220
R37 300
Slope Compensation
Bootstrap Bias
Operates only at startup
R18 2k2
R19 2k2
R20 2k2
R21 2k2
R22 100k
R25 100k
R24 2k2
Cut-off T3 after startup
T3 IPA80R280P7
R29 47k
T5 BC817-25
R31 8k2
C16 10uF
D6 BZV55-B13
C19 10uF
C17 10uF
C18 10uF
Vcc1
D5 PMLL4148L
Place jumper here to enable internal Vcc
Place jumper here to enable external Vcc
W1A
W1B
W1C
Vcc_int
Vcc_ext
J4
Auxiliary Bias
Operates when Vdc>40V
D8 ES1D
aux
BC817-25 T6
Vcc2
D9 PMLL4148L
R35 4k7
C22 10uF
D10 BZV55-B12
C24 1uF
C23 4.7uF
From aux winding
on PFC inductor
FTG1
FTG2
FTG3
FIDUCIALS
B1
B2
B3
B4
MOUNTING HOLES
J5
Monitoring during rad test
Vcc1
Vcc2
Vcc
ref
vs
comp
J2A
J2B
J2C
J2D
J2G
J2H
MTG1
MTG2
RaToPUS AC/DC
CERN
Title RaToPUS AC/DC
Size: A4
Number: 1
Revision: 2
Date: 10/12/2020
Time: 10:25:17
Sheet 1 of 1
File: C:\DIOT_RTPS\Design\RaToPUS\PFC-Buck-AC-DC-v2-Dec-2020\PFC-Buck-AC-DC-v2-Dec-2020.schdoc
BE-CO-HT, CERN
Esplanade des Particules 1
1211 Meyrin, Switzerland
Altium

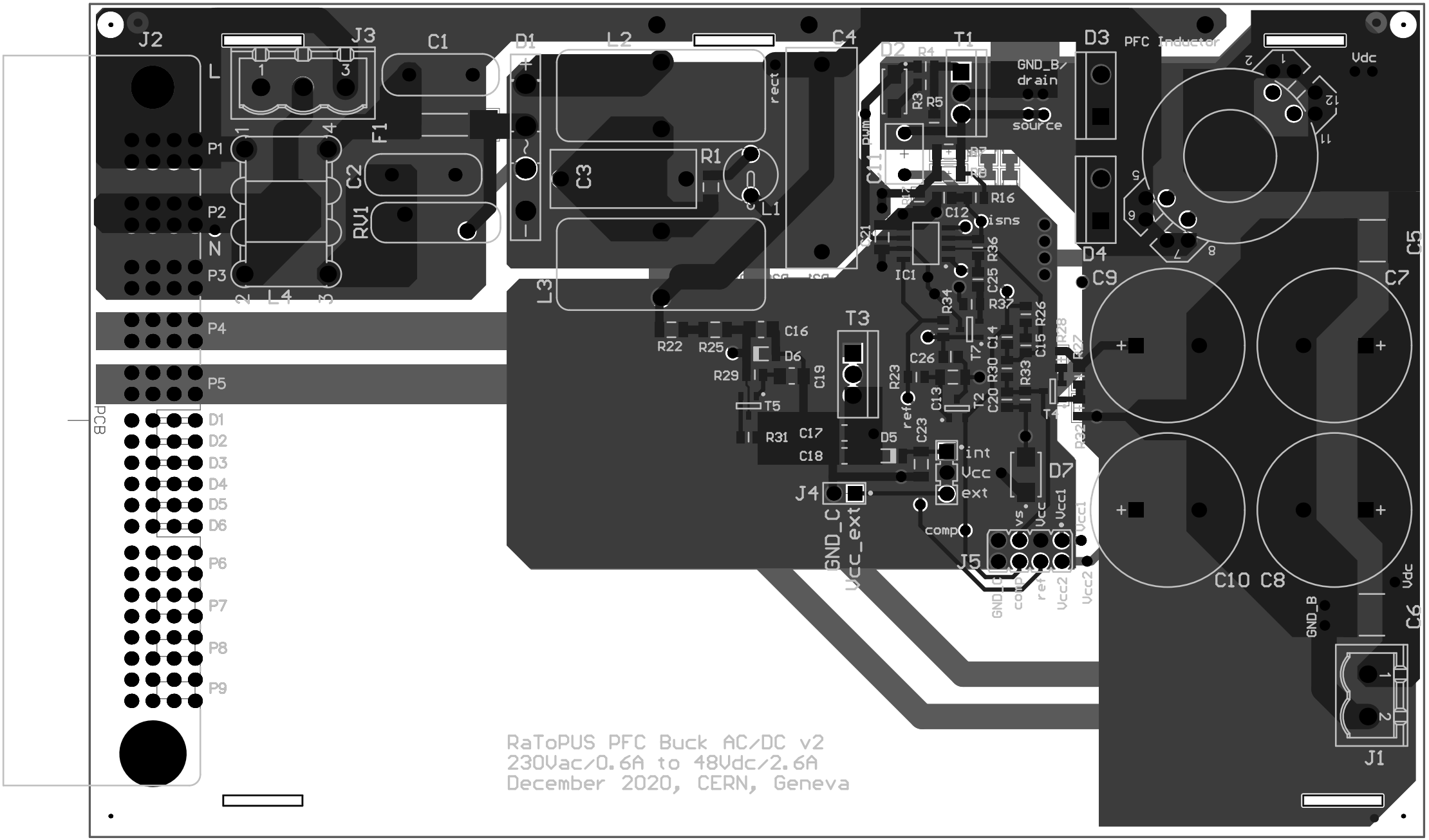

RaToPUS PFC Buck AC/DC v2
230Vac/0.6A to 48Vdc/2.6A
December 2020, CERN, Geneva

Comment	Description	Designator	Footprint Ref	Footprint	LibRef	Mounted	Package/Description	Part Description	Qty
Non-Plated Hole	Single Terminal Hole	H1, H2, H3, H4		MTG270	MTG270	No	Non-Plated Through Hole: Hole Dia. 2.7mm	Non-Plated Through Hole: Hole Dia. 2.7mm	4
100nF	Non-polarised capacitor	C1, C2	0402/402 or 0603/1608	CAPR8_MURATA_GRM155R60J104KE19D or CAPC1005N0402	CC0_100nF_250V_X7R_20%_MURATA_GRM155R60J104KE19D	No		Safety Recognized/HB grr Voltage Ceramic Capacitor, Type X7R Class 2/1, 10	2
0201nF	Non-polarised capacitor	C3	0402/402	CAPR1005-0201X170X0.125MM	CPR_0201nF_25V_X7R_20%_VISHAY_VJ0402Y201KXXAP	No		Multilayer Ceramic Capacitors Metallized Polypropylene Film Capacitor (MKP)(B 32)	1
1uF	Non-polarised capacitor	C5	0402/402	CAPR1005-0201X170X0.125MM	CPR_1uF_6.3V_X5R_10%_TDK_B31B_CP	No		Metallized Polypropylene Film Capacitor (MKP)	1
4.7uF	Non-polarised capacitor	C6, C4		CAPC5750N2000	C_4.7uF_1_SMD_10%_X7R	No		1 SMD Multilayer Ceramic Chip Capacitor	2
470uF	Polarised capacitor	C7, C9, C8, C10	0402/1206	CAPRR750-1800X2800	CAPR_470UF_16_SP_20%_OMRON-CON_2420-3216-12TAR/250	No		470 SMDM Miniature Radial Multilayer Electrolytic Capacitor, (E35 Series)	4
2200pF	Non-polarised capacitor	C11		CAPR500-400X720X600	CPR_2200pF_400V_X7R_10%_EPCOS-TDK_B32560	No		2200 pF 400V Polypropylene Capacitor DPS	1
1uF	Non-polarised capacitor	C12, C26		CAPC2012X1005N	C0805_1NF_25V_X7R_C500	No		0805 Multilayer Chip Ceramic Capacitor	2
4.7uF	Non-polarised capacitor	C13, C21, C23		CAPC3216X1608N	C1206_4.7UF_25V_X7R_470	No		1206 Multilayer Chip Ceramic Capacitor	3
22nF	Non-polarised capacitor	C14		CAPC2012X1250N	C0805_22NF_50V_X7R_470	No		0805 Multilayer Chip Ceramic Capacitor	1
220nF	Non-polarised capacitor	C15		CAPC3216X1350N	C1206_220NF_50V_X7R_470	No		1206 Multilayer Chip Ceramic Capacitor	1
10uF	Non-polarised capacitor	C16, C17, C18, C19, C22		CAPC3216X1600N	C1206_10UF_25V_X5R_TDK_C3216X5R1E106M	No		1206 Multilayer Chip Ceramic Capacitor Automotive Grade	5
220nF	Non-polarised capacitor	C20		CAPC2012X1350N	C0805_220NF_50V_X7R	No		0805 Multilayer Chip Ceramic Capacitor	1
1uF	Non-polarised capacitor	C24, C25		CAPC3216X1600N	C1206_1UF_50V_X7R	No		1206 Multilayer Chip Ceramic Capacitor	2
RM10	RM10 Coil Former	C29, FORMER1		CORE37_TDK_B65811N1610R051_RM10/I/A/10/E/25/19	CORE37_TDK_B65811N1610R051_RM10/I/A/10/E/25/19	No		RM10/Coil Former (EF Pcs)	1
DB1AU	Bridge Rectifier 1A 24C 24C 0	D1	D7B1W3	BRIDGE_V	DB1AB_V	No	Glass Passivated Single-Phase Bridge Rectifier, Body 22.0mm x 5.8mm	Single-Phase Glass Passivated Bridge Rectifier	1
1N10	Diode	D2, D8		DIOM5027X224N	D1N10	No	400 V 0.8 A Rectifier Diode, Body 5.0x2.7mm, IPC Medium Density	Fast Rectifier	2
SPR1C20H5B20	Schottky Diode	D3, D4	DO9774	TO-220AC-2-V	SPR1C20H5B20L	No	PD 100 AC Inc 2 Terminal + Tab Vertical Mount	High Surge Mount Cathode Power Schottky Diode	2
P6KLLG14B	Diode	D5, D9		DIOM4127B10N	P6KLLG14B	No	DO204AC, MELF Diode, 2-Leads, Body 3.6x1.6mm, IPC Medium Density	High-speed Switching Diode	2
SZV59-B13	Zener Diode	D6		DIOM4127B10N	SZV59-B13	No	DO204AC, MELF Diode, 2-Leads, Body 3.6x1.6mm, IPC Medium Density	Voltage Regulator Diode	1
SMB.S2A	Zener Diode	D7		DIOM4320B23N5	SMB.S2A	No	JEDEC DO-214AA(SMB) Diode, Body 4.3x2.1mm, L 5.6x3mm W 3.1-2.6mm H, IPC Medium Density	Transient Voltage Suppressor Diode	1
SZV59-B12	Zener Diode	D10		DIOM4127B10N	SZV59-B12	No	DO204AC, MELF Diode, 2-Leads, Body 3.6x1.6mm, IPC Medium Density	Voltage Regulator Diode	1
LA-250VAC	Fuse	F1	0510/7214	FUSC_BOURNS_MF-SR275-0	FUS3B512_BOURNS_MF-SR275-0	No	2812 (10X30mm), Body 10.1mm x 3.16mm, AngPhum™ SF-SR275-0 Series	Single Blow Fuse for Consumer/ Protection	1
Use only in PCB	Fiducial Target	FID1, FID2, FID3		FIDUCIAL_TOP_100-200	FIDUCIAL_TARG_T_C100-200	No	Round Fiducial Target, Top Layer: 1.00mm, Top Solder 2.0mm, Keepout: +2.0mm	Round Fiducial Target, Top Layer: 1.00mm, Top Solder 2.0mm, Keepout: +2.0mm	3
Heat Sink 2 Pads	Heat Sink With 2 pads	HS1, HS2		SHSR_DUMMYFOOT_10_MCY_LNNPRP_x	SHSR_DUMMYFOOT_10_MCY_LNNPRP_x	No	Simulated Heat Sink For PCB Mounting With 3x7CW – 1.84mm Wide x 9.0 Long x 12.7mm H (B 2mm)	Simulated Heat Sink For PCB Mounting With 3x7CW – 1.84mm Wide x 9.0 Long x 12.7mm H (B 2mm)	2
FL20-43B20R-0	High Performance Current Mode Choke Coil Solutions, 40°C to 85°C	IC1		SOIC127P600X2-7N-EN	FL20-43B20R-0	No	SOIC, 1.27mm Pitch, 8 Pin, 3.90mm x 6.00mm x 1.75mm H Thermal Body, 5x 7.4 Wide Pad Sub 2.3x 2.3-6mm), IPC Medium Density	High-Performance Current Mode Choke Coil Solutions, -40°C to 85°C	1
Footby	Connector 2 Male	J1		PHD2NSX_17B07-09	PHD2NSX_17B07-09	No		2PIN, 2MM Pitch 0.38mm, 2 Position Header	1
Pwr/Brade	Wire-Wire, Wire-Board, 5.0mm, Power/Blade Right Angled Power Connector SKCP 20 AP Contacts	J2		ASPW4ENDS_S19-S9-607	ASPW4ENDS_S19-S9-607	No		Right Angle Power/Blade Power Connector SKCP 20 AP, 245 x 4P Contacts	1
Footby	Connector 3 Male	J3		PHD2NSX_17B07-09	PHD2NSX_17B07-09	No		2PIN, 2MM Pitch 0.38mm, 2 Position Header	1
Header 2	Connector 2 Male	J4		SAMTEC_HTSW-101-23-L-D	SAMTEC_HTSW-101-23-L-D	No		2 Contacts Pitch 2.54mm, Dual Row Through Mount Straight Header (Post Lead 3.68mm, Tail Lead 2.54mm, Insulator 2.54mm)	1
Header 8	Connector 8 Male	J5		SAMTEC_MTLW-101-07-L-D-280	SAMTEC_MTLW-101-07-L-D-280	No		8 Contacts Pitch 2.54mm, Dual Row Through Mount Straight Header (Post Lead 3.68mm, Tail Lead 2.54mm, Insulator 5.08mm)	1
22uH	Inductor 9001 Axial	L1	2778643	INDR9000-400X1000	IND_22UH_6%_MS1014-22	No		Axial Inductor	1
100uH	Inductor	L2, L3	2383527	IND_WURTH_WE-S-PL 7447372C3	IND_100UH_20%_WURTH_WE-PD	No		Shielded Inductor Constant-Low Choke WE-PT Series	2
1u 8 mm	Inductor Common Mode	L4	1123097	IND_TDK_B82731-N	IND_35MH_30%_TDK_B82731N4103	No		1 Component Ring Core Double Choke B82731N Series	1
3K2	Resistor - 2%	R1		RESC3216X60N	R1206_3K2_2%_0.25W_200PPM	No		General Purpose Thick Film Chip Resistor	1
1M	Resistor - 2%	R2, R6, R9		RESC3216X60N	R1206_1M0_1%_0.25W_200PPM	No		General Purpose Thick Film Chip Resistor	3
1R7	Resistor - 2%	R3, R4		RESC2012X60N	R0805_1R7_2%_0.125W_200PPM	No		General Purpose Thick Film Chip Resistor	2
27k	Resistor - 2%	R5, R29		RESC2012X60N	R0805_27K_2%_0.125W_100PPM	No		General Purpose Thick Film Chip Resistor	2
3K32	Resistor - 2%	R7, R8		RESC3216X70N	R1206_3K32_1%_0.5W_100PPM	No		Thick Film Chip Resistor	2
680	Resistor - 2%	R10, R11, R12, R13, R14, R15		RESC3216X60N	R1206_680R_2%_0.25W_100PPM	No		General Purpose Thick Film Chip Resistor	6
100	Resistor - 2%	R16		RESC2012X60N	R0805_100R_1%_0.125W_100PPM	No		General Purpose Thick Film Chip Resistor	1
0	Resistor	R17		RESC2012X60N	R0805_0R_JUMPER	No		0R 0.125W Max DC Resistance Jumper Chip Jumper	1
3k2	Resistor - 2%	R18, R19, R20, R21, R22		RESC3216X60N	R1206_3K2_2%_0.25W_100PPM	No		General Purpose Thick Film Chip Resistor	5
100k	Resistor - 2%	R23, R25		RESC3216X60N	R1206_100K_2%_0.25W_100PPM	No		General Purpose Thick Film Chip Resistor	2
1M	Resistor - 2%	R24		RESC2012X60N	R0805_1M_1%_0.125W_100PPM	No		General Purpose Thick Film Chip Resistor	1
3k3	Resistor - 2%	R26		RESC2012X60N	R0805_3K3_2%_0.125W_100PPM	No		General Purpose Thick Film Chip Resistor	1
100k	Resistor - 2%	R27, R28		RESC2012X60N	R0805_100K_2%_0.125W_100PPM	No		General Purpose Thick Film Chip Resistor	2
200k	Resistor - 2%	R30		RESC2012X60N	R0805_200K_2%_0.125W_100PPM	No		General Purpose Thick Film Chip Resistor	1
3k2	Resistor - 2%	R31		RESC2012X60N	R0805_3K2_2%_0.125W_100PPM	No		General Purpose Thick Film Chip Resistor	1
10k	Resistor - 2%	R32		RESC2012X60N	R0805_10K_1%_0.125W_100PPM	No		General Purpose Thick Film Chip Resistor	1
0.1k	Resistor - 0.1%	R33		RESC3216X60N	R1206_0R1_0.1%_0.25W_100PPM	No		Thick Film Chip Resistor	1
33k	Resistor - 2%	R34		RESC2012X60N	R0805_33K_2%_0.125W_100PPM	No		General Purpose Thick Film Chip Resistor	1
3k7	Resistor - 2%	R35		RESC2012X60N	R0805_3K7_2%_0.125W_100PPM	No		General Purpose Thick Film Chip Resistor	1
200	Resistor - 2%	R36		RESC2012X60N	R0805_200R_2%_0.125W_100PPM	No		General Purpose Thick Film Chip Resistor	1
330	Resistor - 1%	R37		RESC2012X60N	R0805_330R_1%_0.125W_100PPM	No		General Purpose Thick Film Chip Resistor	1
SMAJ24C	Transient Voltage Suppressor	RV1	2382884	DOM_SP0103_EC0-0102/0/10/1	SMAJ24CA	No		600W Bidirectional Diode Varistor	1
SPA08N80C3	N-CHANNEL MOSFET 800V, 7.6A	T1, T3	2.75E07	TO-220-V	SPA08N80C3_x	No		800V 17A Ultra Low Power MOSFET	2
FMMT597	PNP Transistor	T2, T4	2231435	SOT89P3500120-4N	FMMT597	No		SOT-23 Bipolar PNP Silicon Planar High Voltage Transistor	2
BC817-25	NPN Transistor	T5, T6, T7	1082224	SOT95P2300110-3N	BC817-25	No		SOT23, 3 pin, Pitch 0.95mm - L 3mm W 2.36mm L 0.1-1mm H, IPC Medium Density	3
Header 3	2.54mm Wire-Wire Contact Strip Header	W1		SAMTEC_HTSW-103-23-L-S	SAMTEC_HTSW-103-23-L-S	No		3 Contacts Pitch 2.54mm, Single Row Through Mount Straight Header (Post Lead 3.68mm, Tail Lead 2.54mm, Insulator 2.54mm)	1