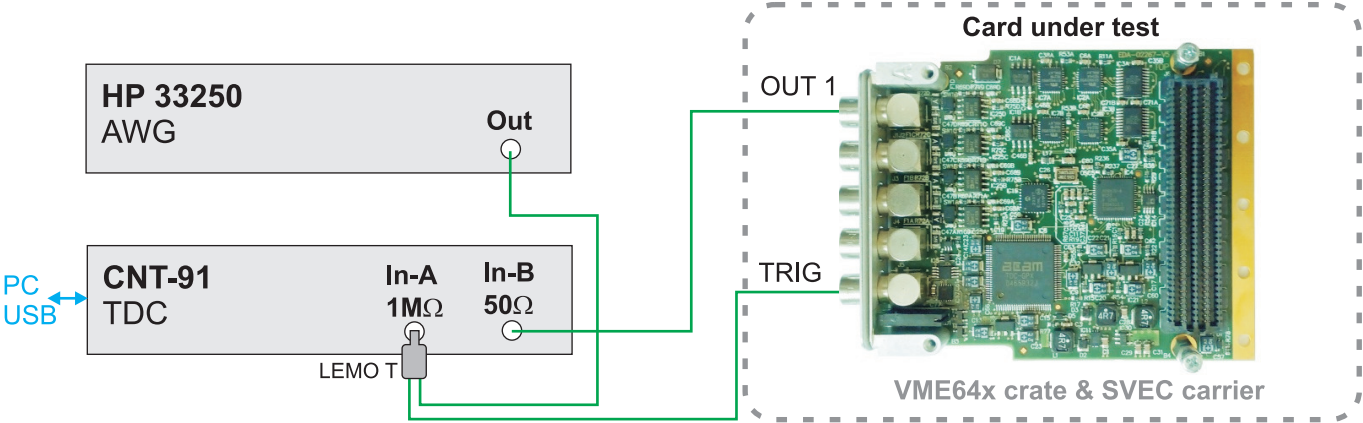
Card under test
HP 33250
AWG
Out
OUT 1
CNT-91
TDC
In-A
1MΩ
In-B
50Ω
PC
USB
TRIG
LEMO T
VME64x crate & SVEC carrier