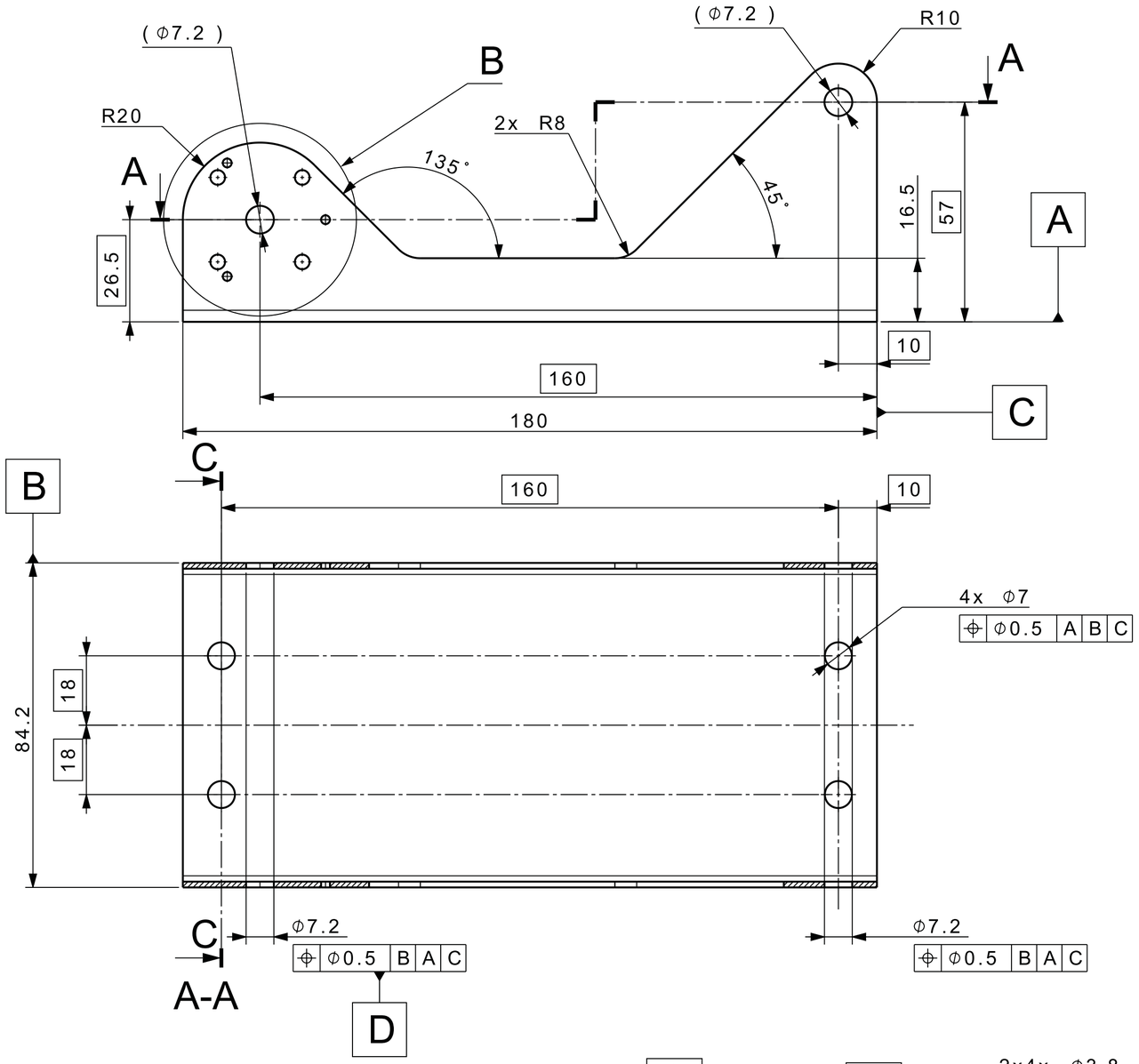

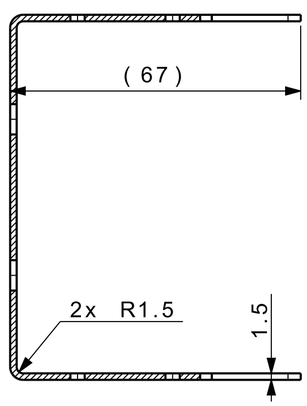

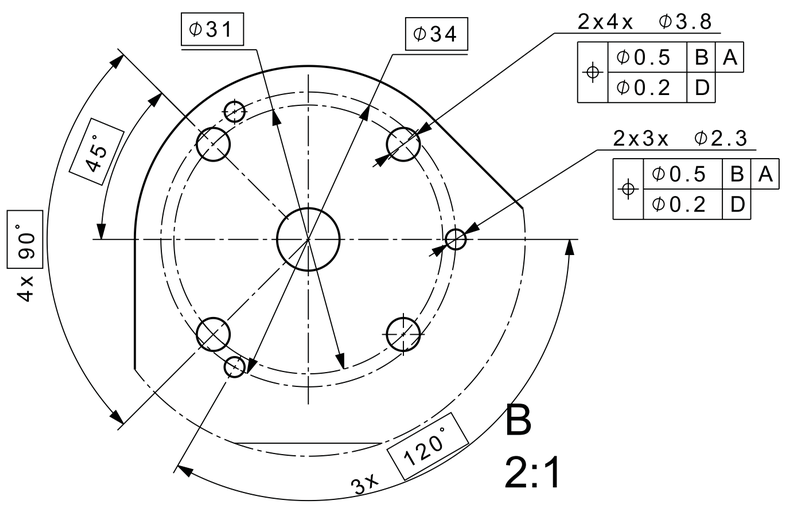

Unfolded view - for information

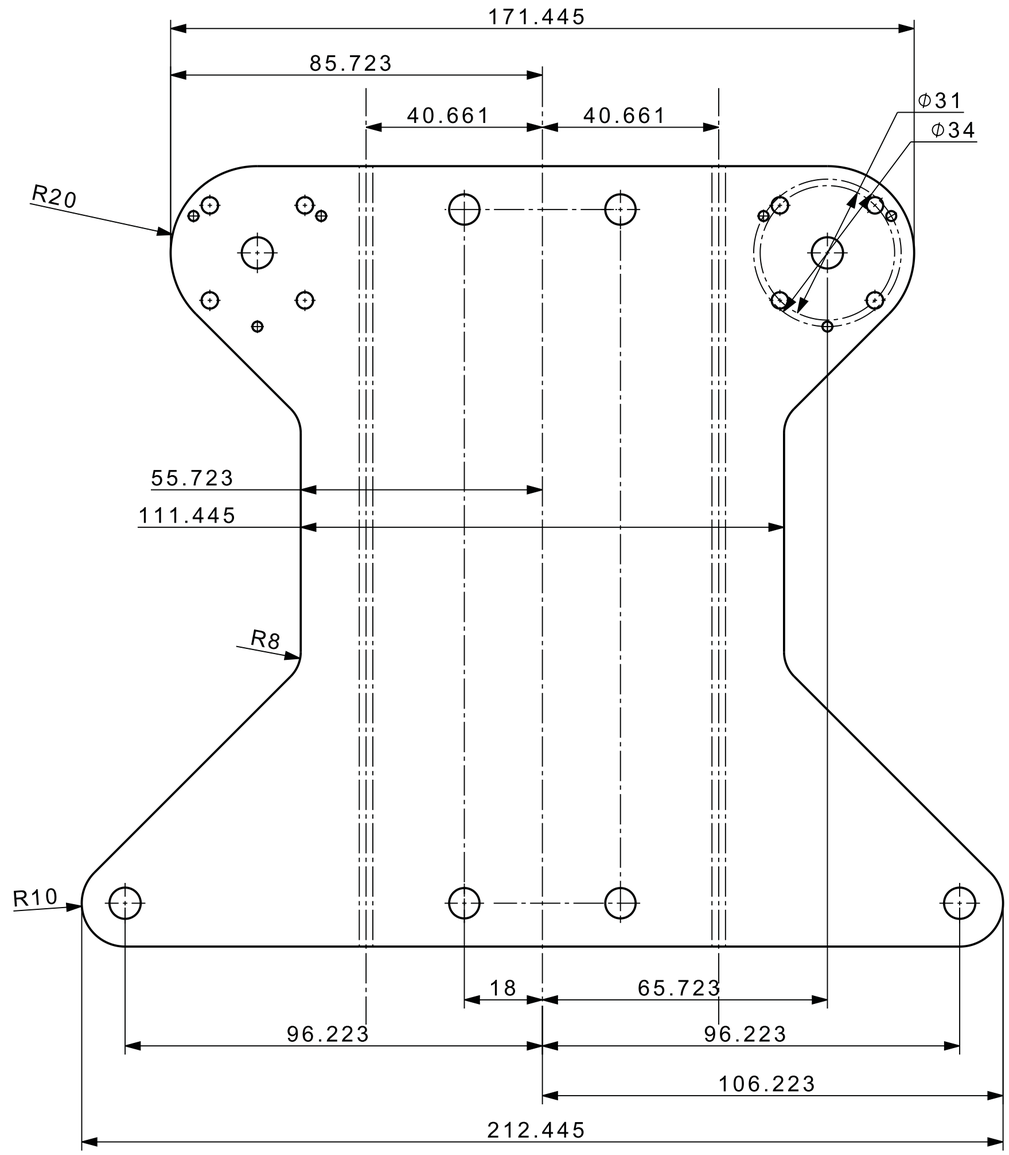

MATERIAL	INITIAL STATE	FINAL STATE
Stainless Steel		

ISO GPS STANDARDS

ISO 2768-mK | ISO 13715 -0.1 -0.3 | +0.5 +0.1

Unless otherwise mentioned, applicable ISO GPS standards are those prior to 2010-08-01 regardless of the drawing date

MASS 313 g | WHERE USED Not Applicable | [Last checked at 2020-04-01 16:56]

DESIGNATION P0001_OB_200326

EQUIPMENT CODE

DESIGNED	L.GENTINI	FORMAT A2
CHECKED		
RELEASED		SCALE 1:1
APPROVED		

DESIGNED 2020-04-01

REFERENCES Doc No: ST1312569_02 | INDEX | LABEL NOT VALID FOR EXECUTION | QAC | SHEET 1/1

Ce dessin ne peut être utilisé à des fins commerciales sans autorisation écrite
This drawing may not be used for commercial purposes without written authorisation

TB v2.0 A2:Landscape